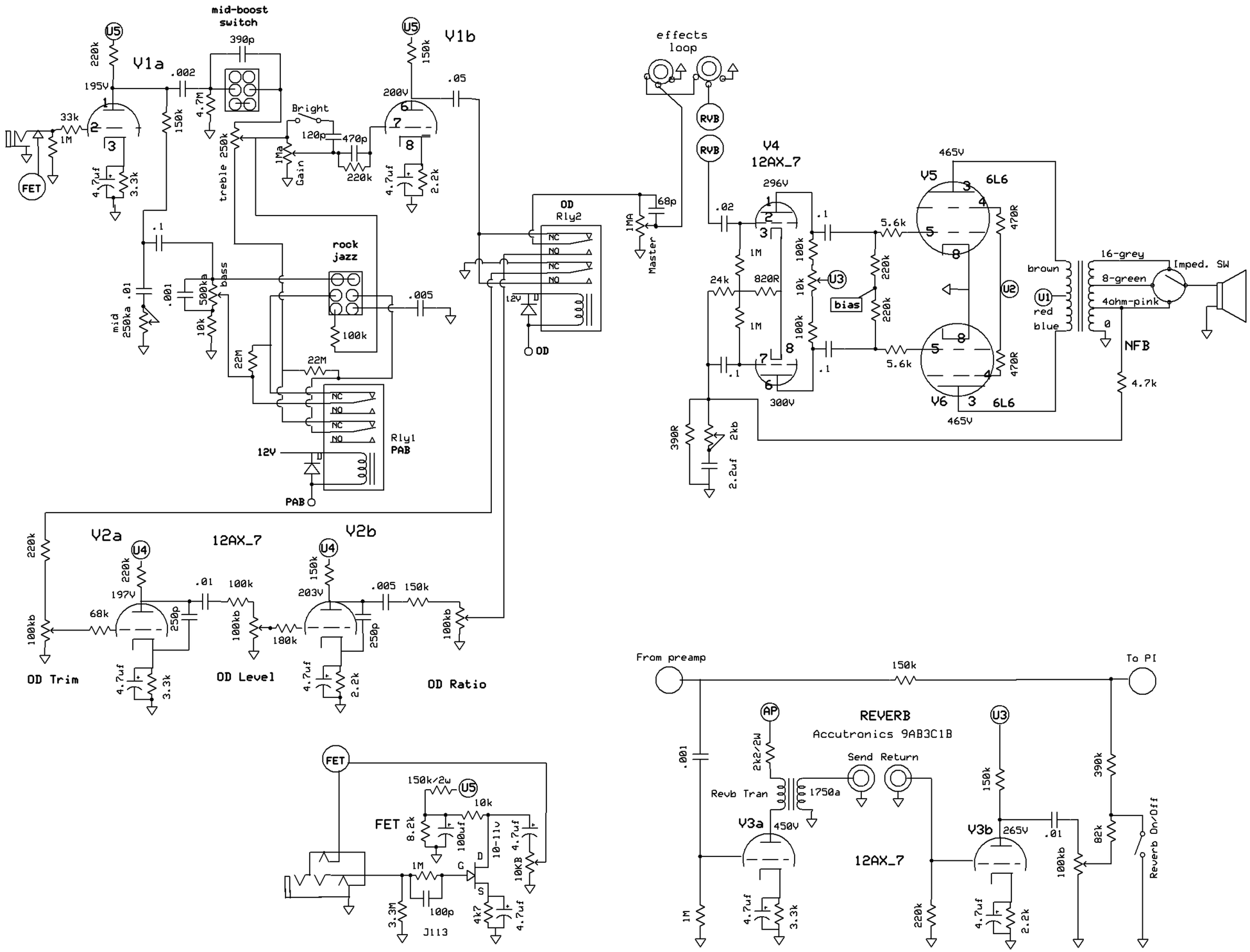

Howlin'Amps ODS - nonHRM 2x6L6 / Reverb

(resistors are 1W if not stated otherwise)